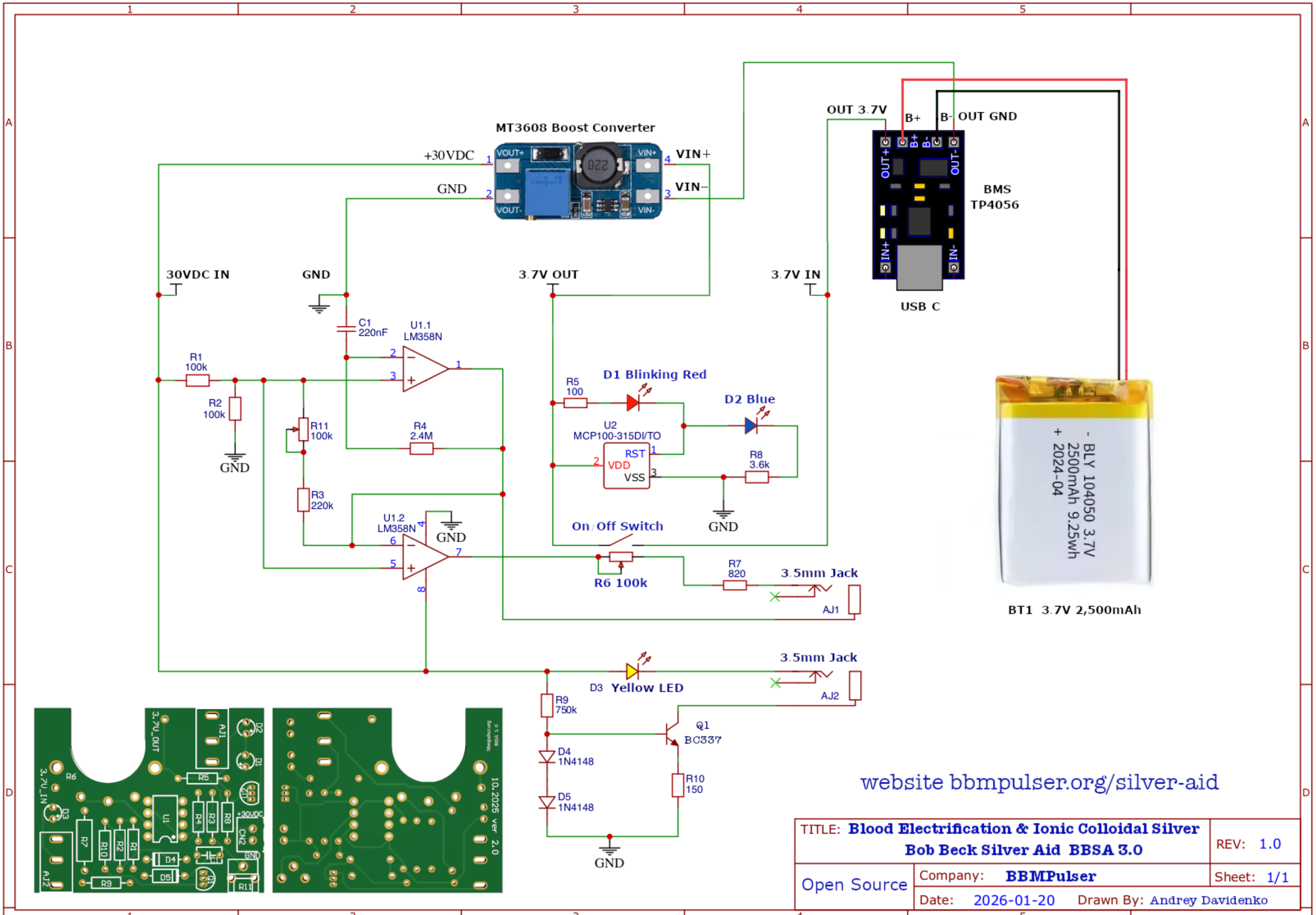
MT3608 Boost Converter
+30VDC
GND
VOUT+
VOUT-
VIN+
VIN-
VIN+
VIN-
OUT 3.7V
B+
B-
OUT GND
OUT+
OUT-
IN+
IN-
BMS
TP4056
USB C
30VDC IN
GND
3.7V OUT
3.7V IN
C1
220nF
U1.1
LM358N
R1
100k
R2
100k
R11
100k
R4
2.4M
R3
220k
U1.2
LM358N
GND
R5
100
D1 Blinking Red
D2 Blue
U2
MCP100-315DI/TO
RST
VDD
VSS
R8
3.6k
On/Off Switch
R6 100k
R7
820
3.5mm Jack
AJ1
BT1 3.7V 2,500mAh
D3 Yellow LED
3.5mm Jack
AJ2
R9
750k
Q1
BC337
D4
1N4148
D5
1N4148
R10
150
website bbmpulser.org/silver-aid
TITLE: Blood Electrification & Ionic Colloidal Silver
Bob Beck Silver Aid BBSA 3.0
REV: 1.0
Open Source
Company: BBMPulser
Sheet: 1/1
Date: 2026-01-20
Drawn By: Andrey Davidenko